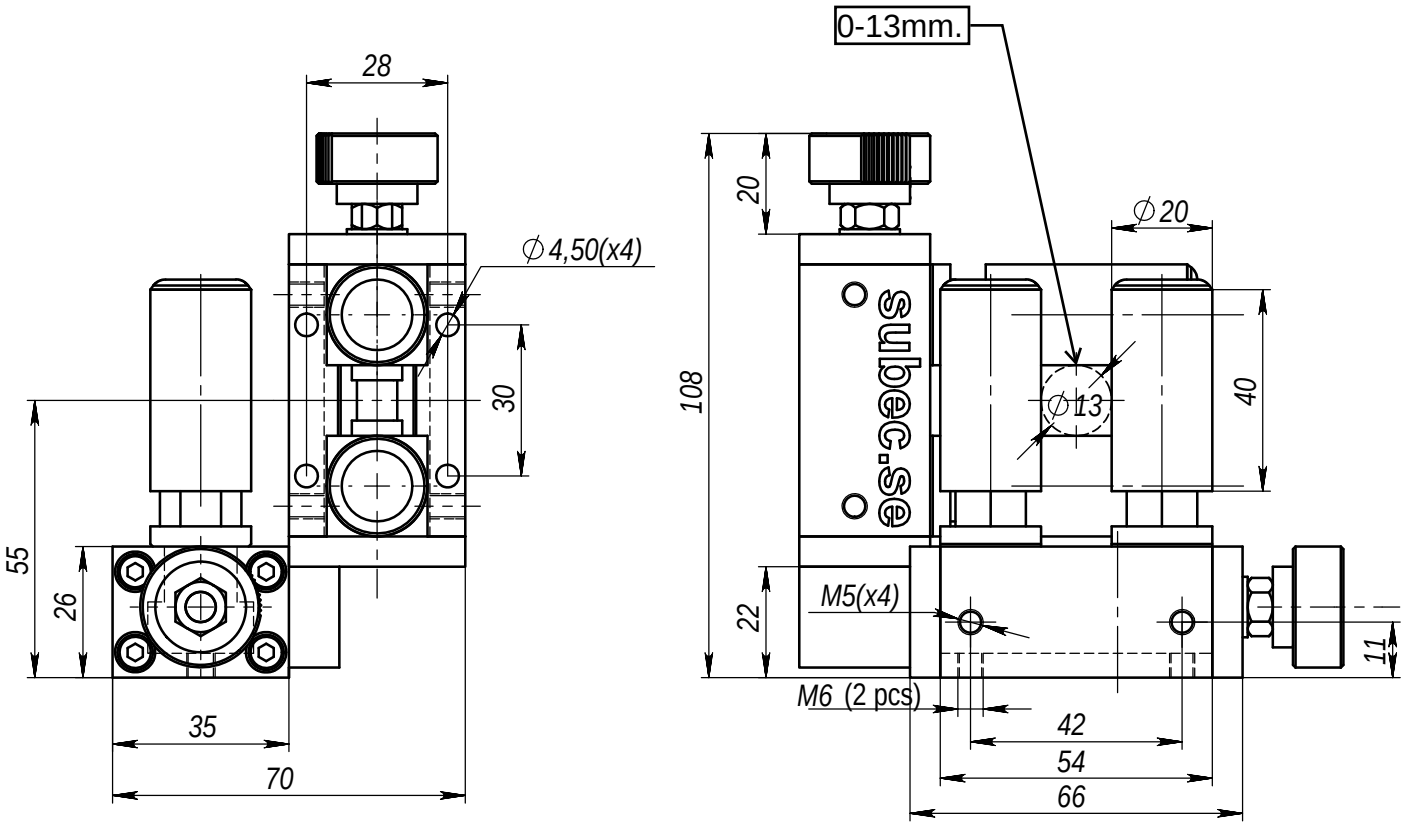

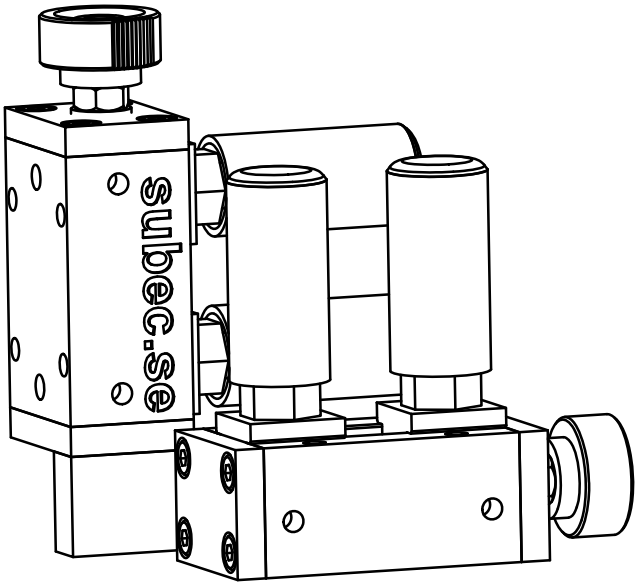

UNLESS OTHERWISE SPECIFIED: DIMENSIONS ARE IN MILLIMETERS SURFACE FINISH: TOLERANCES: LINEAR: ANGULAR:	FINISH: HRC:			DEBUR AND BREAK SHARP EDGES	DO NOT SCALE DRAWING	REVISION
					SUBEC AB	
PROJECT NAME:					TITLE: **Mini Adj.Roller Cross Max 13mm**	
PROJECT NO:						
	NAME	SIGNATURE	DATE			
DRAWN			2010-06-02			
MATERIAL:			ARTICLE NO: 3945		DWG NO. 3-300124-00	A4
Q.A				WEIGHT: 1202.56g	SCALE:1:2	SHEET 1 OF 1 3-300124-00